issue	date	change – ch.note no.	draw

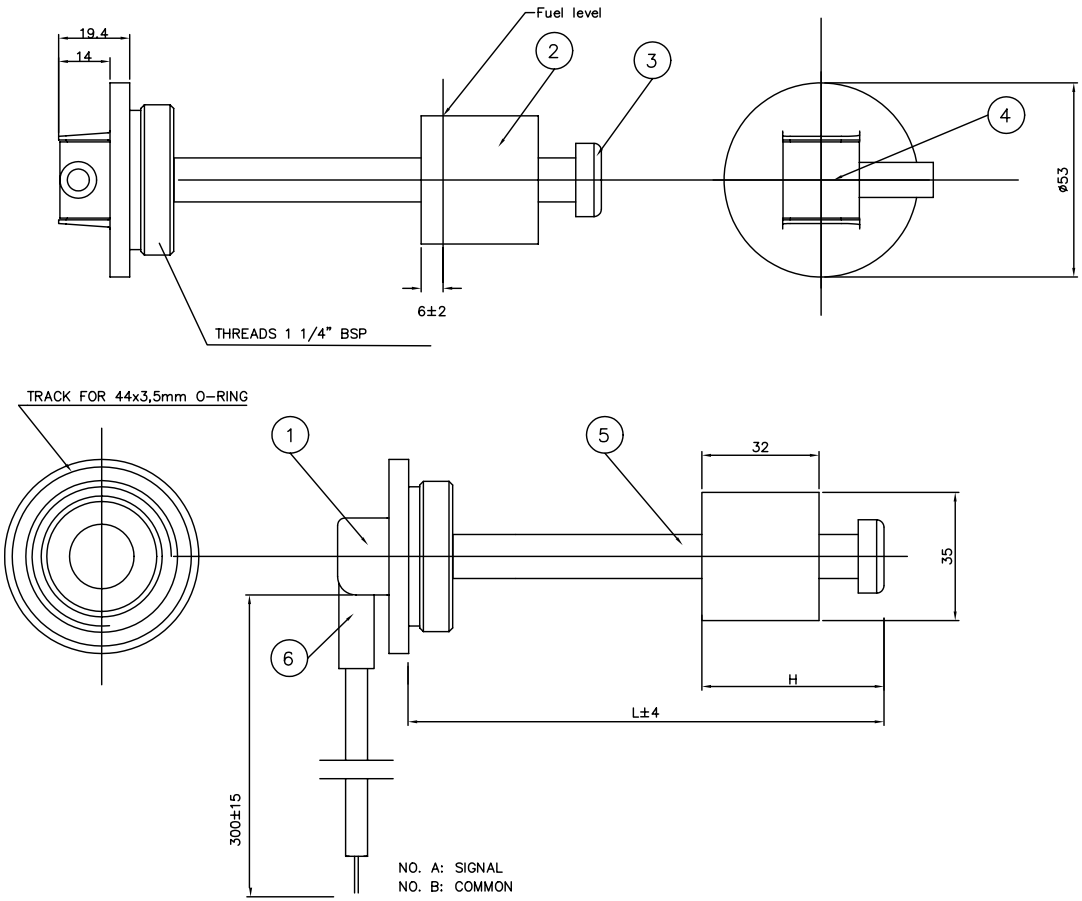

L=400 mm
Signal out
R (ohm) H (mm)
Normally 0–180 ohm

SPECIFICATIONS.

- Can be mounted in steel– , aluminium– and plastic–tank.
- Electrical components: Pmax = 300 mW
  Workingtemperature: –40°C to +70°C
- Can be used in: Arctic diesel
  Diesel (DIN EN 590)
  RME (DIN V 51606)
  and additives of: Gasoline
  Kerosene
  Methanol
  Ethanol
  Vibration: 0,0031 g² / Hz starting at 6 Hz rising to 0 ,025 g² / Hz at 12 Hz and to full input 0,05 g² / Hz at 18 Hz to 150 Hz.
  Orientation: Sensor mounted in fixture standing, as they would be in a truck.
  Vibration axis: All XYZ (3 x 120 deg rotating)
  Duration: 3 x 16 h

All proprietary rights reserved by WEMA–SYSTEM AS. This drawing is not to be reproduced or in any way utilized for the manufacture of a component or unit herein illustrated, and may not be released to other parties, without written consent by WEMA–SYSTEM AS. Any infringement will be legally pursued. Site of court is Bergen, Norway.

POS. NO.	QTY.	NAME, TYPE	MATERIAL
6	1	Cable guide	NBR
5	1	Tube 1/2"	Stainless steel, AISI 316
4	1	Cover	Aluminium
3	1	Plug, bottom	Stainless steel, AISI 316
2	1	Float	N/A
1	1	Head	Stainless steel, AISI 316

PROJECT:

TOLERANCE: ISO 2768 c | SURFACE ROUGHNESS: R_a = | PROJ.: | SCALE: 1:1

	DATE:	Name
DRAW.		
CHECK		
STAND		

FUEL TANK SENSOR
TYPE S3

WEMA–SYSTEM A/S
BERGEN – NORWAY

DRAWING NO, ART. NO./REF:

ISSUE:

PAGE: 1

REPLAC. FOR:

TOLERANCE, FLOAT DESCENDING : H ± 5mm | TOLERANCE,RESISTANCE v.s TEMP. ±100ppm

RESISTANCE TOLERANCE AT 20°C : Rout ±(1,5 ohm + 5% of Rout)